Studio/ **ORE**

497B

PRODUCT NAME

Chapter Four - Deck Mounted Bib Taps - Bell

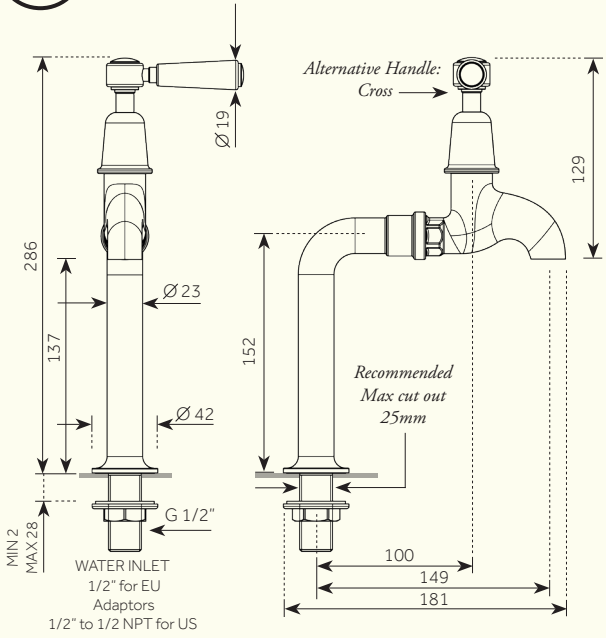

Min/Max Operating pressure: (bars)	2.0 - 5.0					
Flow rates: Bar/L per min	0.5/9.9	1/13.7	2/19.2	3/23.3	4/26.9	5/30
Connection:	1/2" BSP (NPT ADAPTERS ARE INCLUDED)					
Flow Restrictor:	CACHE M16, 5 x 1 PCA (8L per min) (EU) CACHE M16, 5 x 1 PCA (5L per min) (US)					

Dimensions in mm: *Further installation instructions available as a downloadable PDF on the product page of our website.*