495B

PRODUCT NAME

Chapter Four - Wall Mounted Bib Taps - Bell

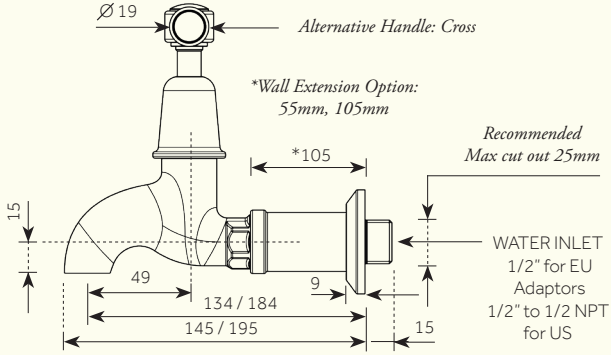

For front view dimensions, please see reverse.

For min/max operating pressures, flow rate information (L/min) and connection specifications, please see reverse for details.

Dimensions in mm. *Further installation instructions available as a downloadable PDF on the product page of our website.*

Studio/ **ORE**

495B

PRODUCT NAME

Chapter Four - Wall Mounted Bib Taps - Bell

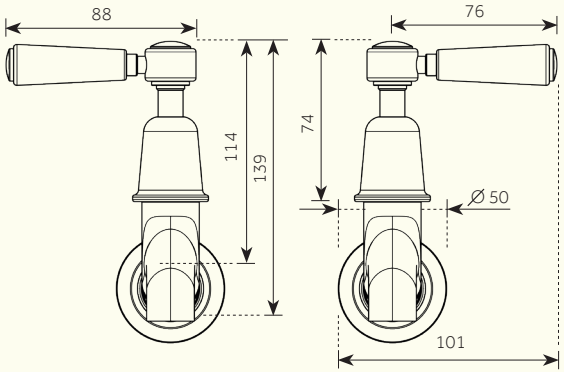

For side view dimensions, please see reverse.

Min/Max Operating pressure: (bars)	**2.0 - 5.0**					
Flow rates: Bar/L per min	**0.5/9.9**	**1/13.7**	**2/19.2**	**3/23.3**	**4/26.9**	**5/30**
Connection:	**1/2" BSP (NPT ADAPTERS ARE INCLUDED)**					
Flow Restrictor:	**CACHE M16 5 x 1 PCA (8L per min) (EU)** **CACHE M16 5 x 1 PCA (5L per min) (US)**					

Dimensions in mm: *Further installation instructions available as a downloadable PDF on the product page of our website.*