493

PRODUCT NAME

Chapter Four - Wall Mounted Shower Mixer with Progressive Cartridge & Backplate

INTERNAL FIRST FIX: SHMNPCIP

**Min Max distances between centre of outlet/ inlet& finished surface of wall*

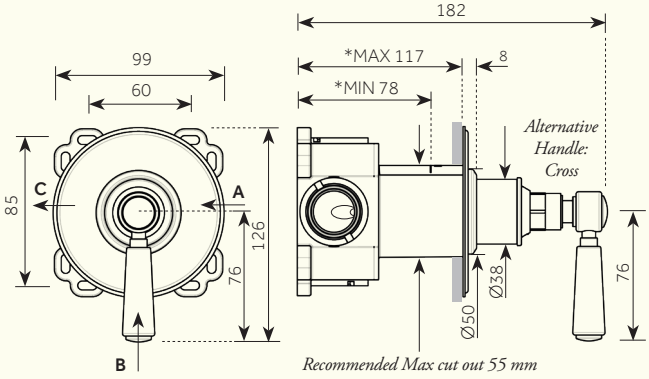

A: G3/4" COLD WATER INLET
B: G3/4" HOT WATER INLET
C: G3/4" WATER OUTLET

For min/max operating pressures, flow rate information(L/min) and connection specifications, please see reverse for details.

Dimensions in mm. *Further installation instructions available as a downloadable PDF on the product page of our website.*

493

PRODUCT NAME

Chapter Four - Wall Mounted Shower Mixer with Progressive Cartridge & Backplate

INTERNAL FIRST FIX: SHMNPCIP

Back Plate Option:
SQ / CR: 100 mm

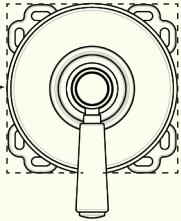

Min/Max Operating pressure: (bars)	0.5 - 6.0						
Flow rates: Bar/L per min (OUTLET 1)	0.5/7.95	1/11.05	2/15.50	3/18.94	4/21.35	5/24.35	6/26.60
Connection:	3/4" BSP (NPT ADAPTERS ARE INCLUDED)						
Flow Restrictor:	N/A						

For Specifications in mm, please see reverse for details.

Further installation instructions available as a downloadable PDF on the product page of our website.