Studio/ **ORE**

486B

PRODUCT NAME

Chapter Four - Wall Mounted Three Ways Diverter with Stop Position & Backplate - Bell

INTERNAL FIRST FIX: TM1H3WDIVIP

**Min Max distances between centre of outlet/inlet & finished surface of wall*

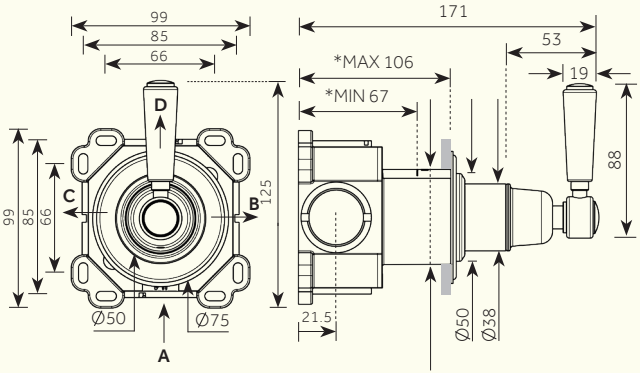

A: G3/4" WATER INLET
B: G3/4" WATER OUTLET
C: G3/4" WATER OUTLET
D: G3/4" WATER OUTLET

For min/max operating pressures, flow rates and connection specifications, please see reverse.

Dimensions in mm. *Further installation instructions available as a downloadable PDF on the product page of our website.*

Studio/ **ORE**

486B

PRODUCT NAME

Chapter Four - Wall Mounted Three Ways Diverter with Stop Position & Backplate - Bell

INTERNAL FIRST FIX: TM1H3WDIVIP

Backplate Options:
SQ / CR: 75 mm
SQ / CR: 100 mm

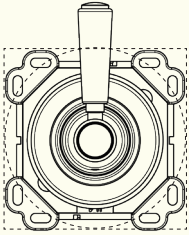

Min/Max Operating pressure: (bars)	**0.5 - 6.0**						
Flow rates: Bar/L per min (OUTLET 1)	0.5/16.30	1/22.40	2/31.00	3/37.00	4/42.70	5/46.81	6/46.81
Flow rates: Bar/L per min (OUTLET 2)	0.5/16.95	1/23.50	2/32.80	3/40.60	4/46.30	5/46.81	6/46.81
Flow rates: Bar/L per min (OUTLET 3)	0.5/16.20	1/22.40	2/31.60	3/38.40	4/43.60	5/46.81	6/46.81
Connection:	**3/4" BSP (NPT ADAPTERS ARE INCLUDED)**						
Flow Restrictor:	**N/A**						

For Specifications in mm, please see reverse for details.

Further installation instructions available as a downloadable PDF on the product page of our website.