479B

PRODUCT NAME

Chapter Four - Wall Mounted Three Ways Diverter with Wall Ring - Bell

INTERNAL FIRST FIX: WDIV3IP -V2

Studio/ **ORE**

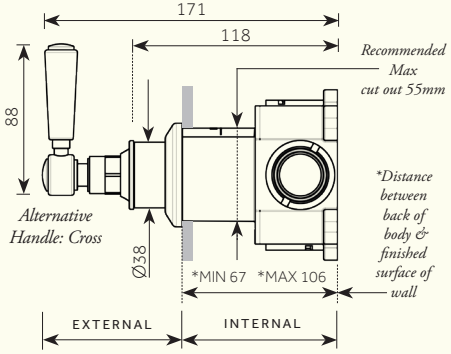

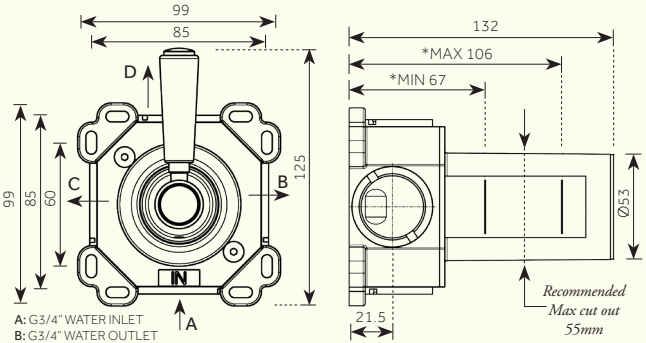

A: G3/4" WATER INLET
B: G3/4" WATER OUTLET
C: G3/4" WATER OUTLET
D: G3/4" WATER OUTLET

For Wall Ring specifications, please see reverse.

For min/max operating pressures, flow rates and connection specificatios, please see reverse.

Dimensions in mm. *Further installation instructions available as a downloadable PDF on the product page of our website.*

Studio/ **ORE**

479B

PRODUCT NAME

Chapter Four - Wall Mounted Three Ways Diverter with Wall Ring - Bell

INTERNAL FIRST FIX: WDIV3IP -V2

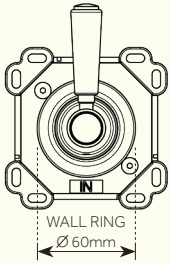

Min/Max Operating pressure: (bars)	**0.5 - 6.0**						
Flow rates: Bar/L per min Outlet 1	**0.5/15.30**	**1.0/20.15**	**2.0/24.30**	**3.0/37.50**	**4.0/43.00**	**5.0/46.81**	**6.0/46.81**
Flow rates: Bar/L per min Outlet 2	**0.5 /17.20**	**1.0/24.00**	**2.0/34.00**	**3.0/41.50**	**4.0/46.81**	**5.0/46.81**	**6.0/46.81**
Flow rates: Bar/L per min Outlet 3	**0.5/15.30**	**1.0/21.50**	**2.0/30.30**	**3.0/37.30**	**4.0/43.00**	**5.0/46.81**	**6.0/46.81**
Flow rates: Bar/L per min Outlet 1-2	**0.5/22.90**	**1.0/32.00**	**2.0/45.00**	**3.0/46.81**	**4.0/46.81**	**5.0/46.81**	**6.0/46.81**
Flow rates: Bar/L per min Outlet 2-3	**0.5/22.90**	**1.0/32.00**	**2.0/45.30**	**3.0/46.81**	**4.0/46.81**	**5.0/46.81**	**6.0/46.81**
Flow rates: Bar/L per min Outlet 3-1	**0.5/22.90**	**1.0/31.90**	**2.0/44.70**	**3.0/46.81**	**4.0/46.81**	**5.0/46.81**	**6.0/46.81**
Connection:	**3/4" BSP (NPT ADAPTERS ARE INCLUDED)**						

For specifications (in mm), please see reverse.

Further installation instructions available as a downloadable PDF on the product page of our website.