Studio/ **ORE**

478

PRODUCT NAME

Chapter Four - Wall Mounted Two Ways Diverter with Wall Ring

INTERNAL FIRST FIX: WDIV2IP -V2

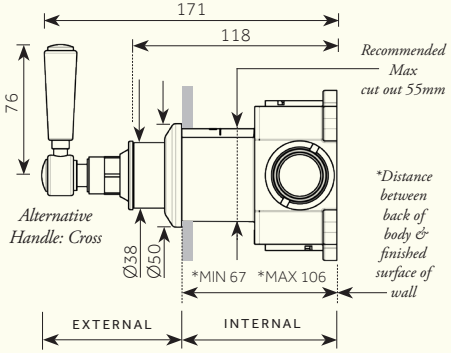

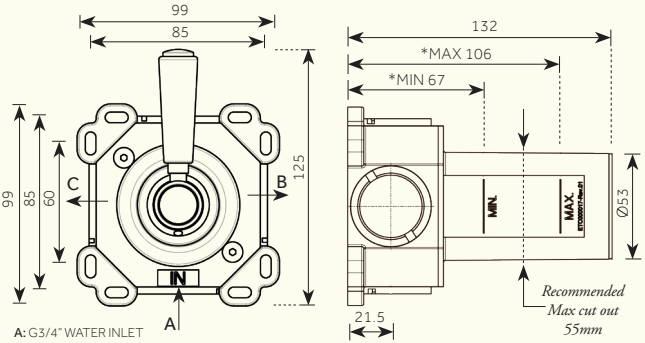

A: G3/4" WATER INLET
B: G3/4" WATER OUTLET
C: G3/4" WATER OUTLET

For Wall Ring specifications, please see reverse.

For min/max operating pressures, flow rates and connection specificatios, please see reverse.

Dimensions in mm. *Further installation instructions available as a downloadable PDF on the product page of our website.*

478

PRODUCT NAME

Chapter Four - Wall Mounted Two Ways Diverter with Wall Ring

INTERNAL FIRST FIX: WDIV2IP -V2

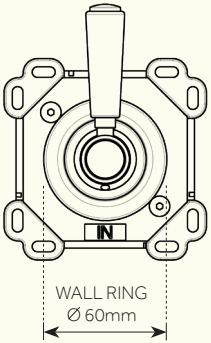

Min/Max Operating pressure: (Bars)	0.5 - 6.0						
WDIV2IP - V2 Full Flow: Bar / L per min OUTLET 1	0.5/15.60	1.0/21.55	2.0/36.70	3.0/37.60	4.0/43.50	5.0/46.81	6.0/46.81
WDIV2IP - V2 Full Flow: Bar / L per min OUTLET 2	0.5/16.30	1.0/22.60	2.0/31.70	3.0/38.90	4.0/44.70	5.0/46.81	6.0/46.81
WDIV2IP - V2 Full Flow: Bar / L per min OUTLET 1+2	0.5/19.60	1.0/27.30	2.0/38.60	3.0/46.81	4.0/46.81	5.0/46.81	6.0/46.81
Connection:	3/4" BSP (NPT ADAPTERS ARE INCLUDED)						

For specifications (in mm), please see reverse.

Further installation instructions available as a downloadable PDF on the product page of our website.