478B

PRODUCT NAME

Studio/ **ORE**

Chapter Four - Wall Mounted Two Ways Diverter with Wall Ring - Bell

INTERNAL FIRST FIX: WDIV2IP -V2

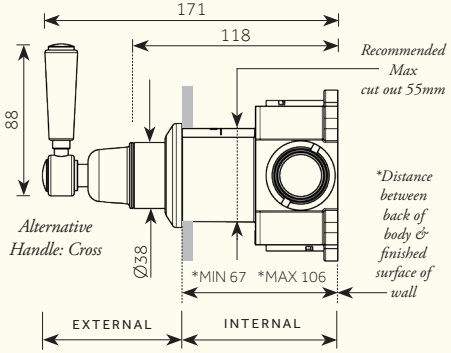

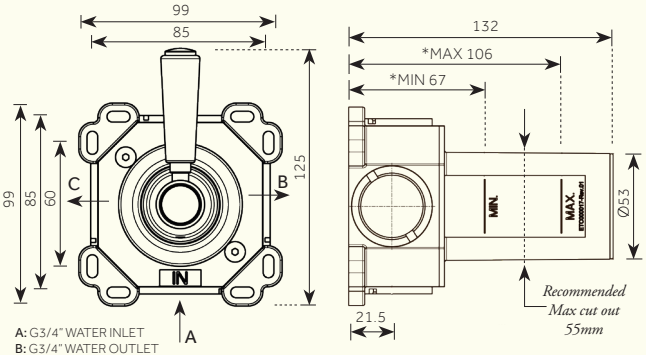

A: G3/4" WATER INLET
B: G3/4" WATER OUTLET
C: G3/4" WATER OUTLET

For Wall Ring specifications, please see reverse.

For min/max operating pressures, flow rates and connection specificatios, please see reverse.

Dimensions in mm. *Further installation instructions available as a downloadable PDF on the product page of our website.*

Studio/ **ORE**

478B

PRODUCT NAME

Chapter Four - Wall Mounted Two Ways Diverter with Wall Ring - Bell

INTERNAL FIRST FIX: WDIV2IP -V2

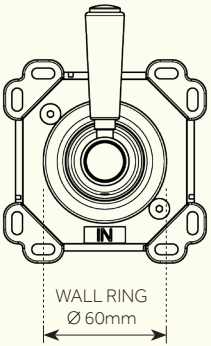

Min/Max Operating pressure: (Bars)	**0.5 - 6.0**						
WDIV2IP - V2 Full Flow: Bar / L per min OUTLET 1	**0.5/15.60**	**1.0/21.55**	**2.0/36.70**	**3.0/37.60**	**4.0/43.50**	**5.0/46.81**	**6.0/46.81**
WDIV2IP - V2 Full Flow: Bar / L per min OUTLET 2	**0.5/16.30**	**1.0/22.60**	**2.0/31.70**	**3.0/38.90**	**4.0/44.70**	**5.0/46.81**	**6.0/46.81**
WDIV2IP - V2 Full Flow: Bar / L per min OUTLET 1+2	**0.5/19.60**	**1.0/27.30**	**2.0/38.60**	**3.0/46.81**	**4.0/46.81**	**5.0/46.81**	**6.0/46.81**
Connection:	**3/4" BSP (NPT ADAPTERS ARE INCLUDED)**						

For specifications (in mm), please see reverse.

Further installation instructions available as a downloadable PDF on the product page of our website.