477

PRODUCT NAME

Chapter Four - Deck Mounted Rose, Hand Shower, Hose & Mount

Studio/ **ORE**

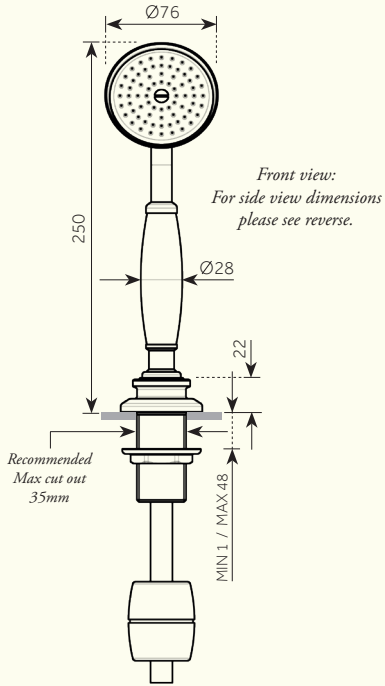

For min/max operating pressures, flow rates and connection information, please see reverse.

Dimensions in mm. *This product is also available as a Hand Held Rose. Further installation instructions available as a downloadable PDF on the product page of our website.*

Studio/ **ORE**

477

PRODUCT NAME

Chapter Four - Deck Mounted Rose, Hand Shower, Hose & Mount

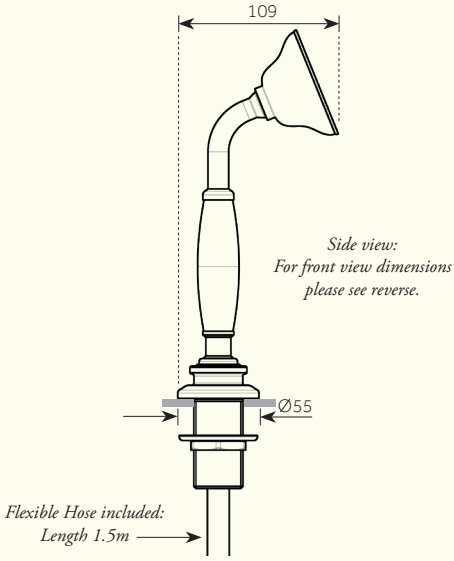

Min/Max Operating pressure: (bars)	2.0 - 5.0										
Flow rates: Bar / L per min	0.5/6.2	1/8.6	1.5/10.7	2/12.4	2.5/13.9	3/15.2	3.5/16.3	4/17.5	4.5/18.6	5/19.6	
Connection:	1/2" BSP (NPT ADAPTERS ARE INCLUDED)										
Flow Restrictor:	PCW-01 (8L per min)										

For specifications (in mm), please see reverse.

Further installation instructions available as a downloadable PDF on the product page of our website.