469

PRODUCT NAME

Chapter Four - Wall Mounted Three Ways Diverter with Backplate

INTERNAL FIRST FIX: WDIV3IP-V2

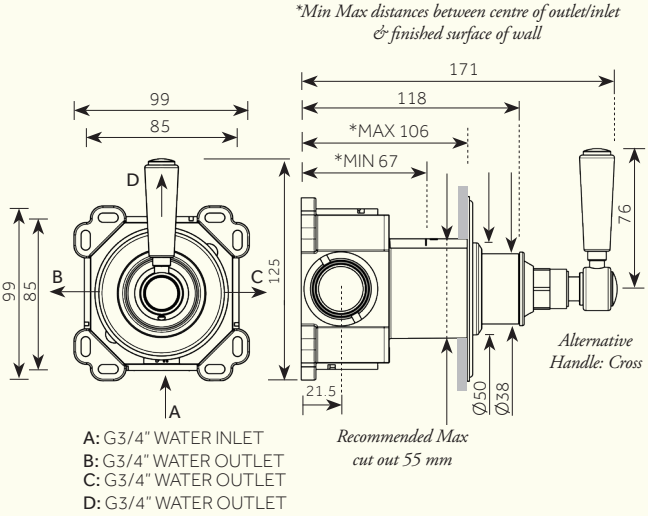

A: G3/4" WATER INLET
B: G3/4" WATER OUTLET
C: G3/4" WATER OUTLET
D: G3/4" WATER OUTLET

For Flow Rate information (Litres/min), please see reverse for details.

Dimensions in mm. *Further installation instructions available as a downloadable PDF on the product page of our website.*

469

PRODUCT NAME

Chapter Four - Wall Mounted Three Ways Diverter with Backplate

INTERNAL FIRST FIX: WDIV3IP-V2

Backplate Options:
SQ / CR: 75 mm
SQ / CR: 100 mm

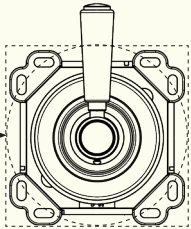

Min/Max Operating pressure: (bars)	0.5 - 6.0						
WDIV3IP-V2 Flow rates: Bar/L per min Outlet 1	0.5/15.30	1.0/20.15	2.0/24.30	3.0/37.50	4.0/43.00	5.0/46.81	6.0/46.81
WDIV3IP-V2 Flow rates: Bar/L per min Outlet 2	0.5/17.20	1.0/24.00	2.0/34.00	3.0/41.50	4.0/46.81	5.0/46.81	6.0/46.81
WDIV3IP-V2 Flow rates: Bar/L per min Outlet 3	0.5/15.30	1.0/21.50	2.0/30.30	3.0/37.30	4.0/43.00	5.0/46.81	6.0/46.81
WDIV3IP-V2 Flow rates: Bar/L per min Outlet 1-2	0.5/22.90	1.0/32.00	2.0/45.00	3.0/46.81	4.0/46.81	5.0/46.81	6.0/46.81
WDIV3IP-V2 Flow rates: Bar/L per min Outlet 2-3	0.5/22.90	1.0/32.00	2.0/45.30	3.0/46.81	4.0/46.81	5.0/46.81	6.0/46.81
WDIV3IP-V2 Flow rates: Bar/L per min Outlet 3-1	0.5/22.90	1.0/31.90	2.0/44.70	3.0/46.81	4.0/46.81	5.0/46.81	6.0/46.81
Connection:	**3/4" BSP (NPT ADAPTERS ARE INCLUDED)**						

For specifications (in mm), please see reverse.

Further installation instructions available as a downloadable PDF on the product page of our website.