Studio/ **ORE**

467

PRODUCT NAME

Chapter Four - Wall Mounted Two Ways Diverter with Backplate

INTERNAL FIRST FIX: TM1HDIVIP-V5

**Min Max distances between centre of outlet/inlet & finished surface of wall*

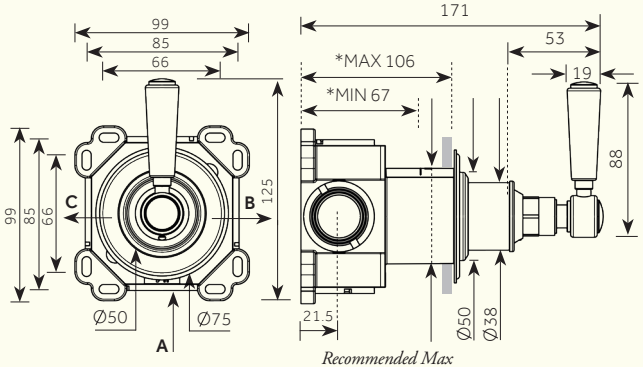

Recommended Max cut out 55 mm

A: G3/4" WATER INLET
B: G3/4" WATER OUTLET
C: G3/4" WATER OUTLET

Backplate Options:
SQ / CR: 75 mm
SQ / CR: 100 mm

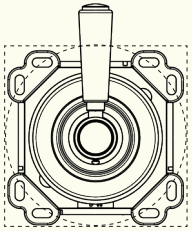

For Flow Rate information (Litres/min), please see reverse for details.

Dimensions in mm. *Further installation instructions available as a downloadable PDF on the product page of our website.*

467

PRODUCT NAME

Chapter Four - Wall Mounted Two Ways Diverter with Backplate

INTERNAL FIRST FIX: TM1HDIVIP-V5

Min/Max Operating pressure: (bars)	0.5 - 6.0						
Flow rates: Bar/L per min (OUTLET 1)	0.5/15.7	1/21.7	2/30.6	3/37.6	4/43.5	5/46.8	6/46.8
Flow rates: Bar/L per min (OUTLET 2)	0.5/15.7	1/21.8	2/30.2	3/37.2	4/43.0	5/46.81	6/46.81
Connection:	3/4" BSP (NPT ADAPTERS ARE INCLUDED)						
Flow Restrictor:	N/A						

For Specifications in mm, please see reverse for details.

Further installation instructions available as a downloadable PDF on the product page of our website.