Studio/ **ORE**

466

PRODUCT NAME

Chapter Four - Wall Mounted Volume Control with Backplate

INTERNAL FIRST FIX: TM1HO/FIP-V5

**Min Max distances between centre of outlet/inlet & finished surface of wall*

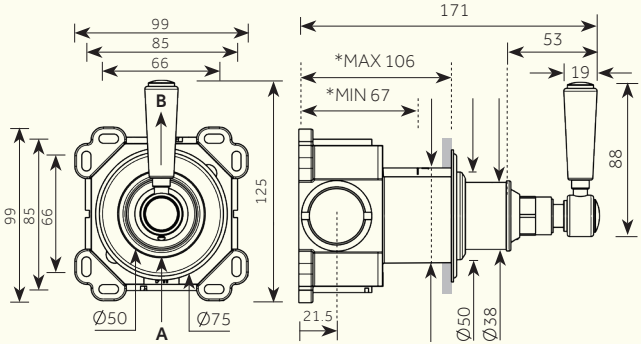

A: G3/4" WATER INLET
B: G3/4" WATER OUTLET

Recommended Max cut out 55 mm

Backplate Options:
SQ / CR: 75 mm
SQ / CR: 100 mm

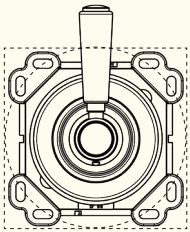

For Flow Rate information (Litres/min), please see reverse for details.

Dimensions in mm. *Further installation instructions available as a downloadable PDF on the product page of our website.*

Studio/ **ORE**

466

PRODUCT NAME

Chapter Four - Wall Mounted Volume Control with Backplate

INTERNAL FIRST FIX: TM1HO/FIP-V5

Min/Max Operating pressure: (bars)	0.5 - 6.0						
TM1HO/FIP - V5 Flow rates: Bar/L per min Outlet 1	0.5/18.90	1.0/26.15	2.0/37.10	3.0/45.30	4.0/46.81	5.0/46.81	6.0/46.81
Connection:	3/4" BSP (NPT ADAPTERS ARE INCLUDED)						

For Specifications in mm, please see reverse for details.

Further installation instructions available as a downloadable PDF on the product page of our website.