Studio/ **ORE**

464

PRODUCT NAME

Chapter Four - Wall Mounted Shower Mixer with Backplate

INTERNAL FIRST FIX: SHMNIP-V3

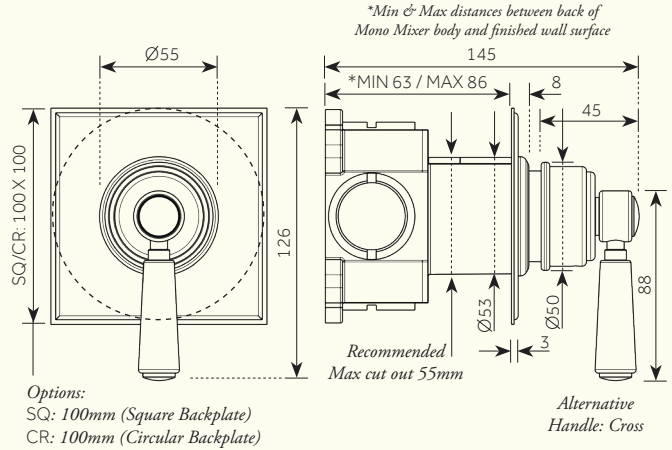

For min/max operating pressures, flow rates, connection specifications, and inlet/outlet information please see reverse.

Dimensions in mm. *Further installation instructions available as a downloadable PDF on the product page of our website.*

464

PRODUCT NAME

Chapter Four - Wall Mounted Shower Mixer with Backplate

INTERNAL FIRST FIX: SHMNIP-V3

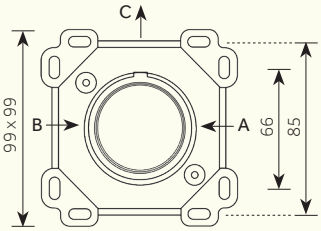

A: G3/4" COLD WATER INLET
B: G3/4" HOT WATER INLET
C: G3/4" MIXED WATER OUTLET

Min/Max Operating pressure: (bars)	**2.0 - 5.0**						
Flow rates: Bar/L per min	**0.5/11.9**	**1/16.3**	**2/22.9**	**3/27.8**	**4/32.0**	**5/35.5**	**6/38.4**
Connection:	**3/4" BSP (NPT ADAPTERS ARE INCLUDED)**						
Flow Restrictor:	**N/A**						

For specifications (in mm), please see reverse.

Further installation instructions available as a downloadable PDF on the product page of our website.