Studio/ **ORE**

462B

PRODUCT NAME

Chapter Four - Deck Mounted Diverter - Bell

INTERNAL FIRST FIX: DDIVIPC23

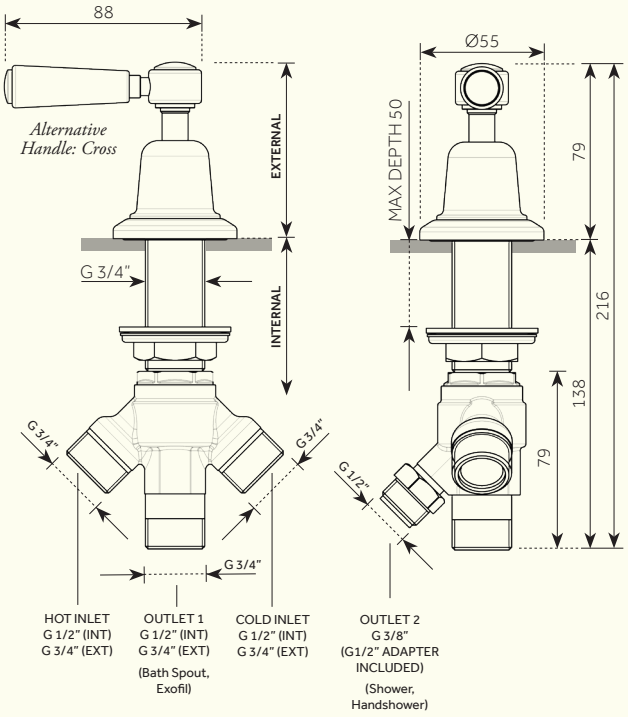

For min/max operating pressures, flow rates & connection information, please see reverse.

Dimensions in mm. *Further installation instructions available as a downloadable PDF on the product page of our website.*

Studio/ **ORE**

462B

PRODUCT NAME

Chapter Four - Deck Mounted Diverter - Bell

INTERNAL FIRST FIX: DDIVIPC23

Min/Max Operating pressure: (bars)	0.5 - 3.0				
Flow rates: Bar / L per min BATH EXIT	1/26	2/35	3/40	4/44	5/49
Flow rates: Bar / L per min SHOWER EXIT	1/19	2/25	3/27	4/30	5/32
Connection:	3/8" BSP x 1 1/2" BSP x 3(Int) 3/4" BSP x 3(Ext) (NPT ADAPTERS ARE INCLUDED)				
Flow Restrictor:	N/A				

For specifications (in mm), please see reverse.

Further installation instructions available as a downloadable PDF on the product page of our website.