*Studio/* **ORE**

461

PRODUCT NAME

## Chapter Four - Wall Mounted Two Ways Diverter with Backplate

INTERNAL FIRST FIX: WDIV2IP-V2

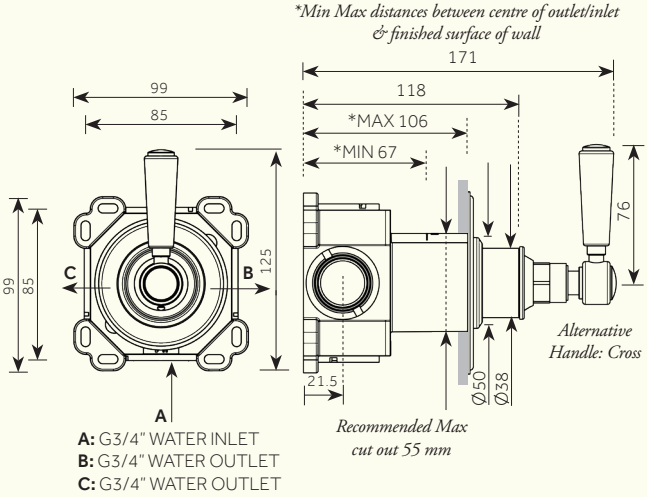


**A:** G3/4" WATER INLET
**B:** G3/4" WATER OUTLET
**C:** G3/4" WATER OUTLET

*For Flow Rate information (Litres/min), please see reverse for details.*

Dimensions in mm. *Further installation instructions available as a downloadable PDF on the product page of our website.*

461

PRODUCT NAME

# Chapter Four - Wall Mounted Two Ways Diverter with Backplate

INTERNAL FIRST FIX: WDIV2IP-V2

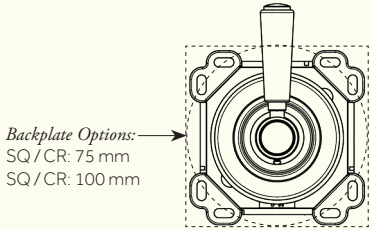


| | | | | | | | |
|---|---|---|---|---|---|---|---|
| **Min/Max Operating pressure: (bars)** | **0.5 - 6.0** | | | | | | |
| **Flow rates: Bar/L per min Outlet 1** | **0.5/15.60** | **1.0/21.55** | **2.0/36.70** | **3.0/37.60** | **4.0/43.50** | **5.0/46.81** | **6.0/46.81** |
| **Flow rates: Bar/L per min Outlet 2** | **0.5/16.30** | **1.0/22.60** | **2.0/31.70** | **3.0/38.90** | **4.0/44.70** | **5.0/46.81** | **6.0/46.81** |
| **Flow rates: Bar/L per min Outlet 1+2** | **0.5/19.60** | **1.0/27.30** | **2.0/38.60** | **3.0/46.81** | **4.0/46.81** | **5.0/46.81** | **6.0/46.81** |
| **Connection:** | **3/4" BSP (NPT ADAPTERS ARE INCLUDED)** | | | | | | |

*For specifications (in mm), please see reverse.*

*Further installation instructions available as a downloadable PDF on the product page of our website.*