Studio/ **ORE**

461B

PRODUCT NAME

Chapter Four - Wall Mounted Two Ways Diverter with Backplate - Bell

INTERNAL FIRST FIX: WDIV2IP-V2

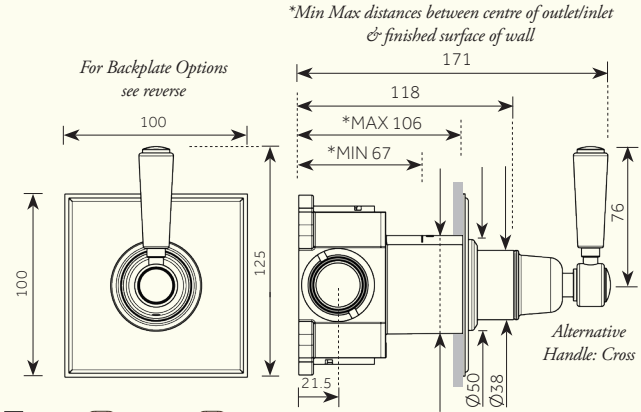

A: G3/4" WATER INLET
B: G3/4" WATER OUTLET
C: G3/4" WATER OUTLET

For Flow Rate information (Litres/min), please see reverse for details.

Dimensions in mm. *Further installation instructions available as a downloadable PDF on the product page of our website.*

Studio/ **ORE**

461B

PRODUCT NAME

Chapter Four - Wall Mounted Two Ways Diverter with Backplate - Bell

INTERNAL FIRST FIX: WDIV2IP-V2

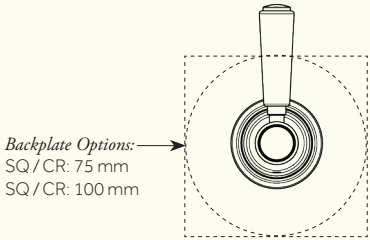

Min/Max Operating pressure: (bars)	**0.5 - 6.0**						
Flow rates: Bar/L per min Outlet 1	**0.5/15.60**	**1.0/21.55**	**2.0/36.70**	**3.0/37.60**	**4.0/43.50**	**5.0/46.81**	**6.0/46.81**
Flow rates: Bar/L per min Outlet 2	**0.5/16.30**	**1.0/22.60**	**2.0/31.70**	**3.0/38.90**	**4.0/44.70**	**5.0/46.81**	**6.0/46.81**
Flow rates: Bar/L per min Outlet 1+2	**0.5/19.60**	**1.0/27.30**	**2.0/38.60**	**3.0/46.81**	**4.0/46.81**	**5.0/46.81**	**6.0/46.81**
Connection:	**3/4" BSP (NPT ADAPTERS ARE INCLUDED)**						

For specifications (in mm), please see reverse.

Further installation instructions available as a downloadable PDF on the product page of our website.