448

PRODUCT NAME

Chapter Four - Singular Deck Mounted Basin Tap

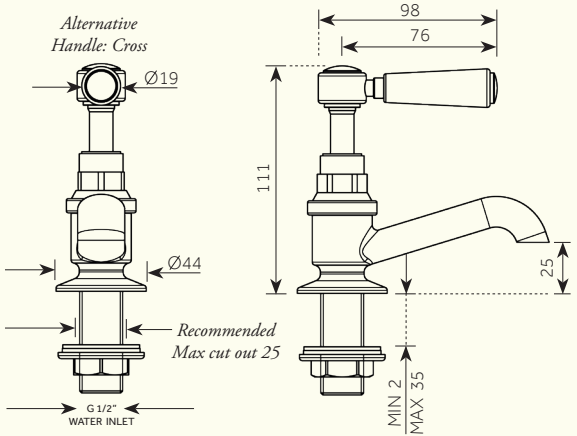

Min/Max Operating pressure: (bars)	**2.0 - 5.0**					
Flow rates: Bar/L per min	**0.5/9.9**	**1/13.7**	**2/19.2**	**3/23.3**	**4/26.9**	**5/30**
Connection:	**1/2" BSP (NPT ADAPTERS ARE INCLUDED)**					
Flow Restrictor:	**N/A**					

Dimensions in mm. *Further installation instructions available as a downloadable PDF on the product page of our website.*