Studio/ **ORE**

440

PRODUCT NAME

Chapter Four - Triple Shower Thermostat with Double Volume Control

INTERNAL FIRST FIX: TM3HIP-V6

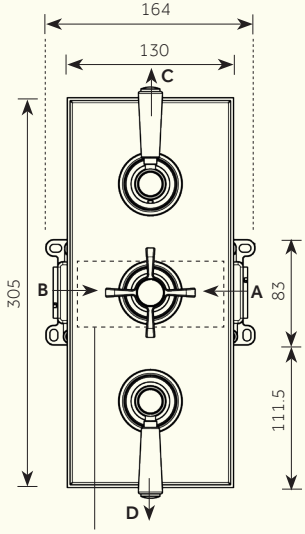

Recommended Max cut out 120 x 55mm

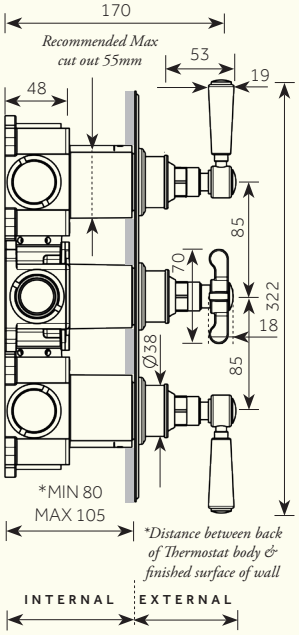

**Distance between back of Thermostat body & finished surface of wall*

A G3/4" COLD WATER INLET
B G3/4" HOT WATER INLET
C G3/4" WATER OUTLET
D G3/4" WATER OUTLET

For min/max operating pressures, flow rates & connection information, please see reverse.

Dimensions in mm. *Further installation instructions available as a downloadable PDF on the product page of our website.*

440

PRODUCT NAME

Chapter Four - Triple Shower Thermostat with Double Volume Control

INTERNAL FIRST FIX: TM3HIP-V6

Min/Max Operating pressure: (bars)	0.5 - 6.0						
Flow rates: Bar/L per min Outlet 1	0.5/12.0	1.0/17.0	2.0/24.5	3.0/30.0	4.0/34.6	5.0/38.7	6.0/42.3
Flow rates: Bar/L per min Outlet 2	0.5/12.2	1.0/17.0	2.0/24.5	3.0/30.0	4.0/34.6	5.0/38.7	6.0/42.3
Connection:	3/4" BSP (NPT ADAPTERS ARE AVAILABLE)						

For specifications (in mm), please see reverse.

Further installation instructions available as a downloadable PDF on the product page of our website.