Studio/ **ORE**

439B

PRODUCT NAME

Chapter Four - Two Holes Wall Mounted Kitchen Bridge Mixer - Bell

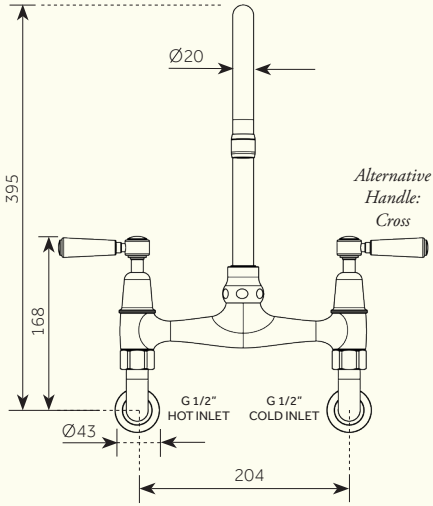

For side view, please see reverse.

For min/max operating pressures, flow rates & connection information, please see reverse.

Dimensions in mm. *Further installation instructions available as a downloadable PDF on the product page of our website.*

Studio/ **ORE**

439B

PRODUCT NAME

Chapter Four - Two Holes Wall Mounted Kitchen Bridge Mixer - Bell

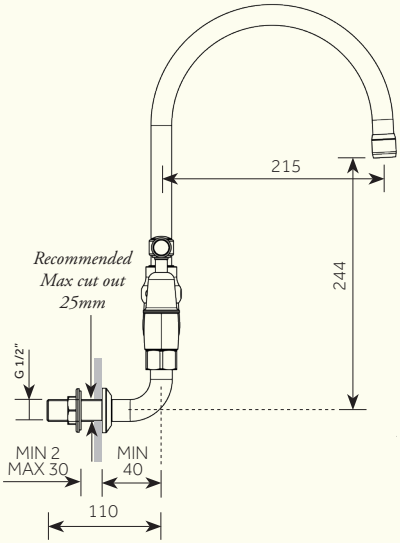

Min/Max Operating pressure: (bars)	**2.0 - 5.0**					
Flow rates: Bar/L per min (with Aerator)	**0.5/9.4**	**1/13**	**2/18.4**	**3/22.5**	**4/26.1**	**5/29.1**
Flow rates: Bar/L per min (without Aerator)	**0.5/31.8**	**1/44.1**	**2/62.1**	**3/76.3**	**4/87.9**	**5/98.1**
Connection:	**1/2" BSP (NPT ADAPTERS ARE INCLUDED)**					
Flow Restrictor:	**CASCADE M22/M24 (22.8 - 25.2 L per min @ 3 Bar) (EU) X (2.2 Gpm Max @ 60 Psi) (US)**					

For front view & specifications (in mm), please see reverse.

Dimensions in mm. *Further installation instructions available as a downloadable PDF on the product page of our website.*