Studio/ **ORE**

438

PRODUCT NAME

Chapter Four - Two Holes Deck Mounted Kitchen Bridge Mixer

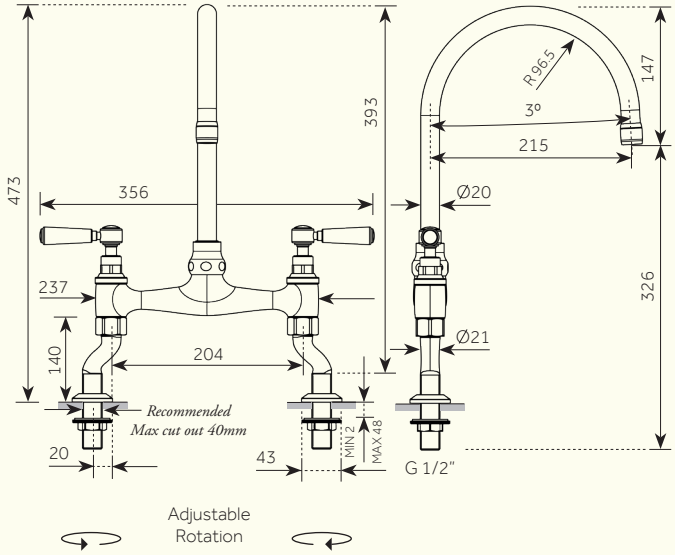

For min/max operating pressures, flow rates and connection information, please see reverse.

Dimensions in mm. Further installation instructions available as a downloadable PDF on the product page of our website.

438

PRODUCT NAME

Chapter Four - Two Holes Deck Mounted Kitchen Bridge Mixer

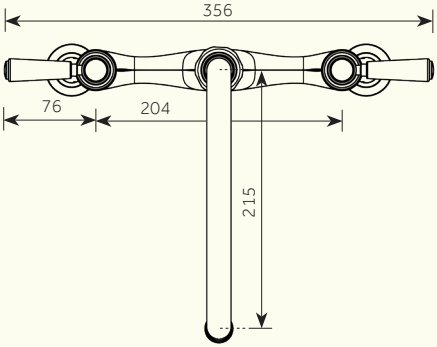

Min/Max Operating pressure: (bars)	2.0 - 5.0					
Flow rates: Bar/L per min (with Aerator)	0.5/9.4	1/13	2/18.4	3/22.5	4/26.1	5/29.1
Flow rates: Bar/L per min (without Aerator)	0.5/31.8	1/44.1	2/62.1	3/76.3	4/87.9	5/98.1
Connection:	1/2" BSP (NPT ADAPTERS ARE INCLUDED)					
Flow Restrictor:	CASCADE M22/M24 (22.8 - 25.2 L per min @ 3 Bar) (EU) X (2.2 Gpm Max @ 60 Psi) (US)					

For specifications (in mm), please see reverse.

Further installation instructions available as a downloadable PDF on the product page of our website.