Studio/ **ORE**

433

PRODUCT NAME

Chapter Four - Shower Thermostat Control Only, One Outlet

INTERNAL FIRST FIX: TM1HDLIP-V6

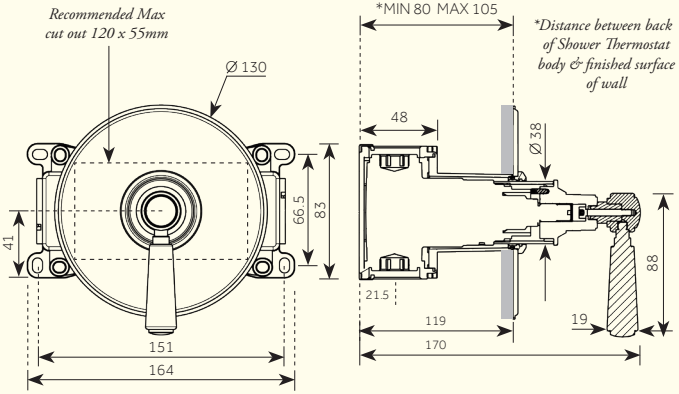

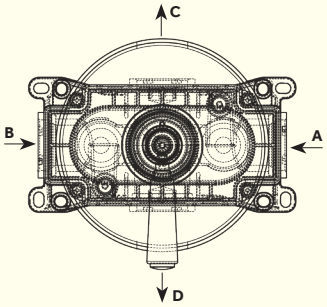

THERMOSTAT COMPOSITION:
TWO OUTLETS - TM1HDLIP - V6

A G3/4" COLD WATER INLET
B G3/4" HOT WATER INLET
C G3/4" MIXED WATER OUTLET
D G3/4" CLOSED

For min/max operating pressures, connection information and back plate options, please see reverse.
Dimensions in mm. *Further installation instructions available as a downloadable PDF on the product page of our website.*

Studio/ **ORE**

433

PRODUCT NAME

Chapter Four - Shower Thermostat Control Only, One Outlet

INTERNAL FIRST FIX: TM1HDLIP-V6

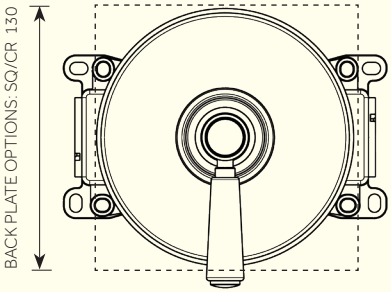

Min/Max Operating pressure: (bars)	**1.0 - 5.0**
Connection:	**3/4" BSP (NPT ADAPTERS ARE INCLUDED)**
Flow Restrictor:	**N/A**

For specifications (in mm), please see reverse.

Further installation instructions available as a downloadable PDF on the product page of our website.