422

PRODUCT NAME

Chapter Four - Deck Mounted Basin Mixer

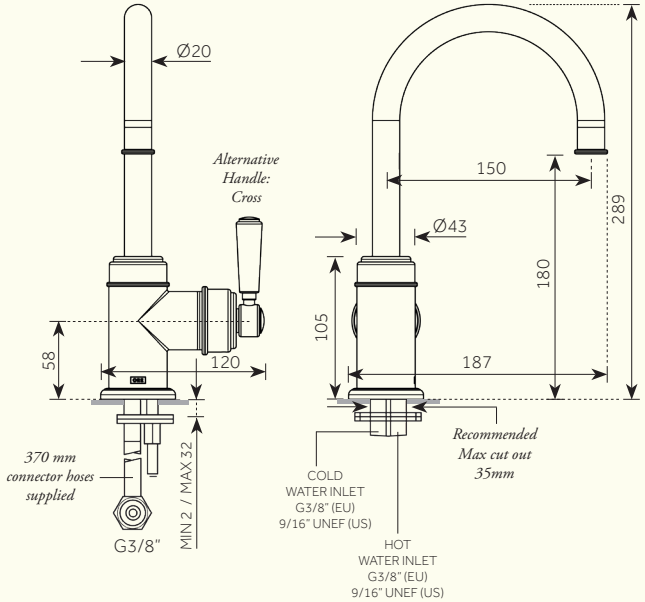

For min/max operating pressures, flow rates and connection information, please see reverse.

Dimensions in mm. *Further installation instructions available as a downloadable PDF on the product page of our website.*

422

PRODUCT NAME

Chapter Four - Deck Mounted Basin Mixer

Min/Max Operating pressure: (bars)	**2.0 - 5.0**					
Flow rates: Bar/L per min (with Aerator)	**0.5/4.3**	**1/5.8**	**2/7.5**	**3/7.8**	**4/7.8**	**5/8.1**
Flow rates: Bar/L per min (without Aerator)	**0.5/9.0**	**1/12.2**	**2/16.9**	**3/20.5**	**4/23.6**	**5/25.5**
Connection:	**G 3/8" (EU)** **9/16" UNEF (US)** **G 1/2" (UK)**					
Flow Restrictor:	**PCA 8L per min (EU)** **PCA 5L per min (US)**					

For specifications (in mm), please see reverse.

Further installation instructions available as a downloadable PDF on the product page of our website.