Studio/ **ORE**

420

PRODUCT NAME

Chapter Four - Wall Mounted Two Holes Basin Mixer

INTERNAL FIRST FIX: W2HMIXIP-V3

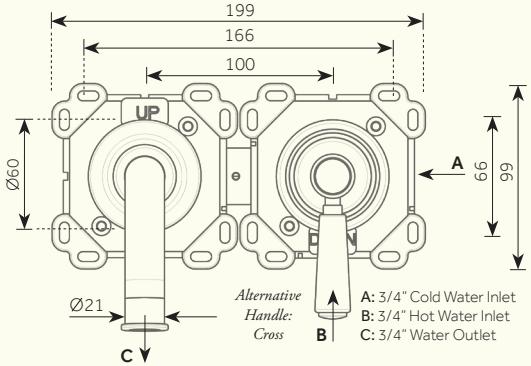

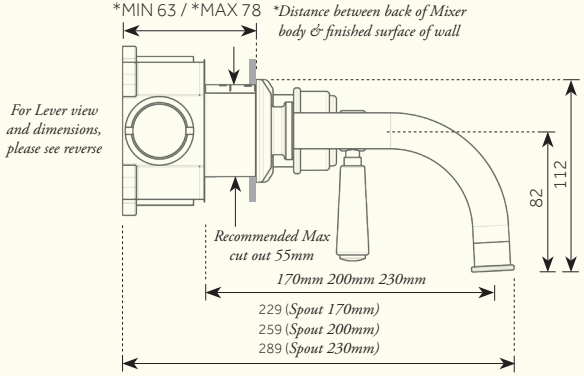

For min/max operating pressures, flow rates and connection information, please see reverse.

Dimensions in mm. *Further installation instructions available as a downloadable PDF on the product page of our website.*

420

PRODUCT NAME

Chapter Four - Wall Mounted Two Holes Basin Mixer

INTERNAL FIRST FIX: W2HMIXIP-V3

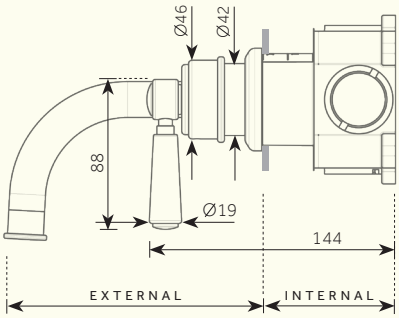

Min/Max Operating pressure: (bars)	**2.0 - 5.0**												
Flow rates: Bar/L per min (with Aerator)	**0.5**	**11.5**	**1**	**16.2**	**2**	**23.0**	**3**	**28.0**	**4**	**32.3**	**5**	**36.0**	**6**	**39.0**
Connection:	**3/4" BSP (NPT ADAPTERS ARE INCLUDED)**													
Flow Restrictor:	**PCA (8.0 L per min) (EU)** **PCA (5.0 L per min) (US)**													

PLEASE NOTE: This product is available with 'Back Plate', 4201 for fixing to wall.

For specifications (in mm), please see reverse.

Further installation instructions available as a downloadable PDF on the product page of our website.