Studio/ **ORE**

414

PRODUCT NAME

Chapter Four - Wall Mounted Bath Mixer with Hand Shower

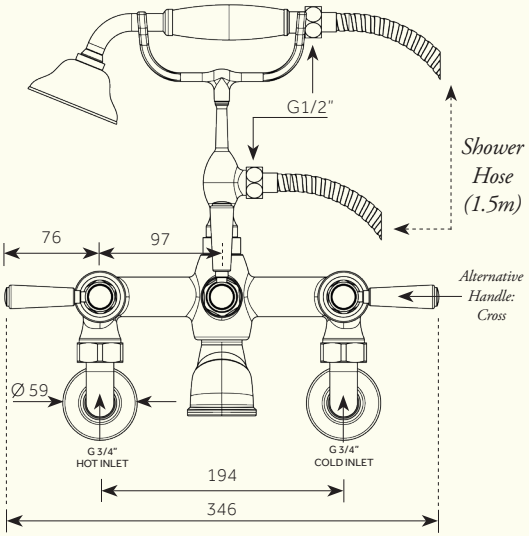

For min/max operating pressures, flow rates & connection information, please see reverse.

Dimensions in mm. *Further installation instructions available as a downloadable PDF on the product page of our website.*

Studio/ **ORE**

414

PRODUCT NAME

Chapter Four - Wall Mounted Bath Mixer with Hand Shower

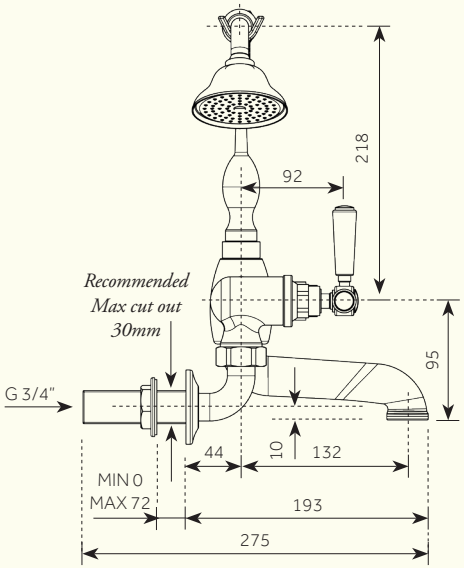

Min/Max Operating pressure: (bars)	**2.0 - 5.0**						
Flow rates: Bar/L per min	**0.5/20.4**	**1/28**	**1.5/34**	**2/39.1**	**2.5/43.9**	**3/47.9**	**3.5/51.8**
Connection:	**3/4" BSP (NPT ADAPTERS ARE AVAILABLE)**						
Flow Restrictor:	**N/A**						

For specifications (in mm), please see reverse.

Further installation instructions available as a downloadable PDF on the product page of our website.