Studio/ **ORE**

412B

PRODUCT NAME

Chapter Four - Three Holes Wall Mounted Bath Tap - Bell

INTERNAL FIRST FIX: WBASIP

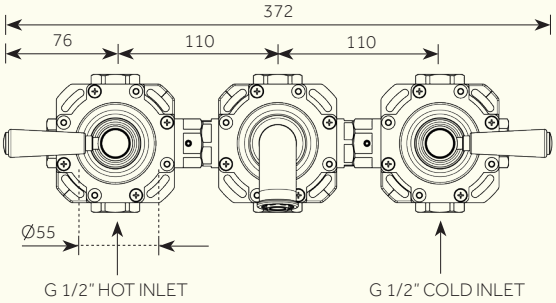

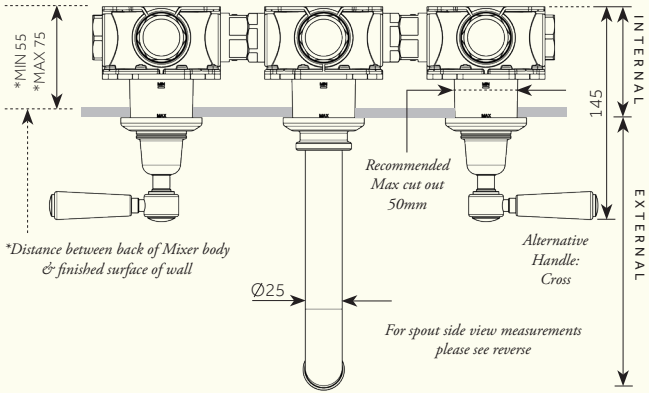

For min/max operating pressures, flow rates and connection information, please see reverse.

Dimensions in mm. Further installation instructions available as a downloadable PDF on the product page of our website.

Studio/ **ORE**

412B

PRODUCT NAME

Chapter Four - Three Holes Wall Mounted Bath Tap - Bell

INTERNAL FIRST FIX: WBASIP

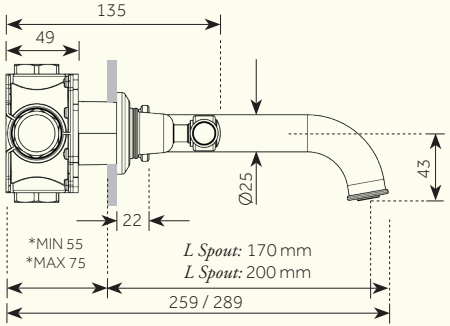

**Distance between back of Mixer body & finished surface of wall*

For spout front view measurements please see reverse

Min/Max Operating pressure: (bars)	**0.5 - 5.0**					
Flow rates: Bar/L per min (with Aerator)	**0.5/8.6**	**1.0/12.2**	**2.0/17.4**	**3.0/21.5**	**4.0/25.0**	**5.0/27.8**
Connection:	**1/2" BSP (EU)** **1/2" NPT (US)**					
Flow Restrictor:	**CASCADE M22/24 (22.8-25.2 L per min @ 3 bar) (EU)** **X (2.2 Gpm Max @ 60 psi) (US)**					

For specifications (in mm), please see reverse.

Further installation instructions available as a downloadable PDF on the product page of our website.