Studio/ **ORE**

410

PRODUCT NAME

Chapter Four - Deck Mounted Basin Spout

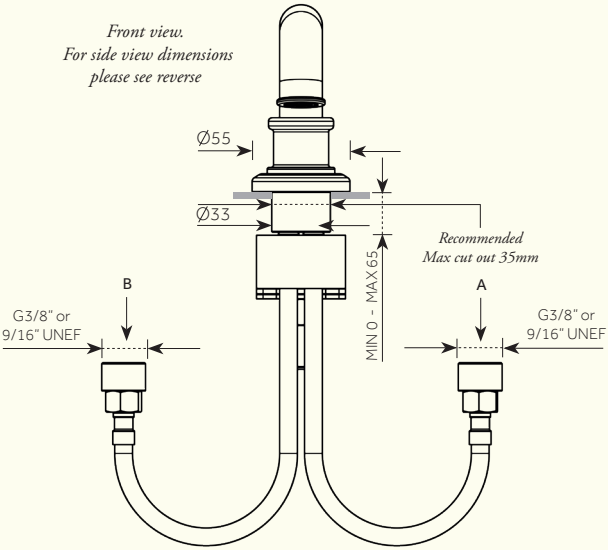

Option DL (Double Inlet)
A: COLD WATER INLET
B: HOT WATER INLET

Option SIN (Single Inlet)
A: WATER INLET

Dimensions in mm. See reverse for Flow Rate & Connection Specifications.
Further installation instructions available as a downloadable PDF on the product page of our website.

410

PRODUCT NAME

Chapter Four - Deck Mounted Basin Spout

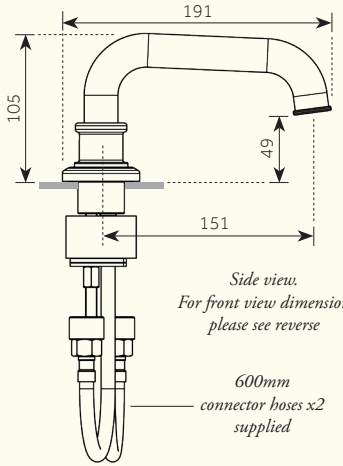

Side view.
For front view dimensions please see reverse

600mm connector hoses x2 supplied

Min/Max Operating pressure: (bars)	**2.0 - 5.0**					
Flow rates: Bar/L per min (with Aerator)	**0.5/6**	**1/8.4**	**2/11.8**	**3/14.5**	**4/16.8**	**5/18.7**
Flow rates: Bar/L per min (without Aerator)	**0.5/7.5**	**1/10.5**	**2/14.7**	**3/18**	**4/20.8**	**5/23.3**
Connection:	**3/8" BSP (EU)** **9/16" UNEF (US)** **1/2" Adaptors (UK)**					
Flow Restrictor:	**CASCADE M22/M24 (22.8 - 25.2 L per min @ 3 Bar) (EU)** **X (2.2 Gpm Max @ 60 Psi) (US)**					

For specifications (in mm), please see reverse.

Further installation instructions available as a downloadable PDF on the product page of our website.