409B

PRODUCT NAME

Chapter Four - Wall Mounted Basin/Bath Control Tap - Bell

INTERNAL FIRST FIX: WBASCTIP

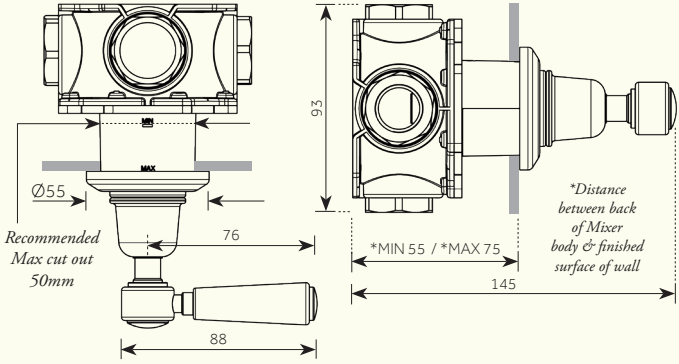

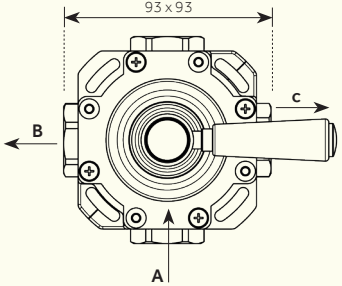

Water Inlet:
A: 1/2" BSP (EU)
1/2" NPT (US)

Water Outlets:
Option RT:
B: 1/2" BSP (EU)
1/2" NPT (US)
Option LT:
C: 1/2" BSP (EU)
1/2" NPT (US)

Min/Max Operating pressure: (bars)	**2.0 - 5.0**
Connection:	**1/2" BSP (EU)** **1/2" NPT (US)**
Flow Restrictor:	**N/A**

Dimensions in mm. *Further installation instructions available as a downloadable PDF on the product page of our website.*