Studio/ **ORE**

408

PRODUCT NAME

Chapter Four - Three Holes Wall Mounted Basin Tap

INTERNAL FIRST FIX: WBASIP

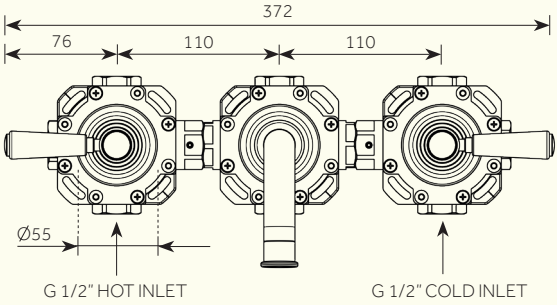

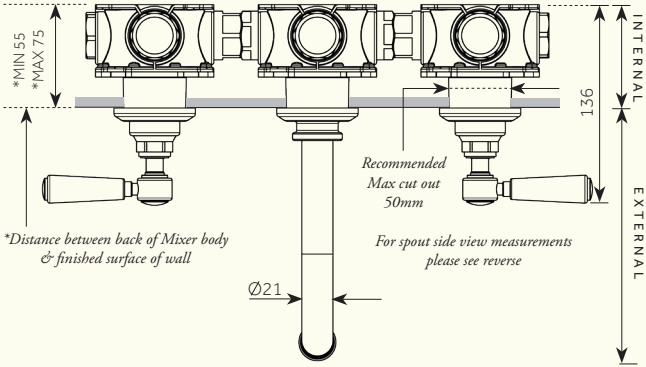

For min/max operating pressures, flow rates and connection information, please see reverse.

Dimensions in mm. *Further installation instructions available as a downloadable PDF on the product page of our website.*

Studio/ ORE

408

PRODUCT NAME

Chapter Four - Three Holes Wall Mounted Basin Tap

INTERNAL FIRST FIX: WBASIP

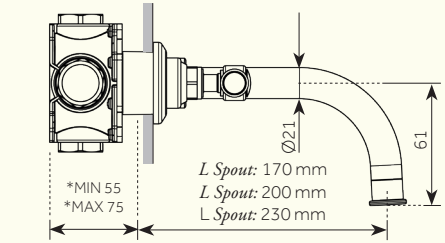

**Distance between back of Mixer body & finished surface of wall*

Min/Max Operating pressure: (bars)	**0.5 - 5.0**					
Flow rates: Bar/L per min (with Aerator)	0.5/4.5	1.0/6.3	2.0/8.2	3.0/8.7	4.0/8.0	5.0/8.0
Connection:	**1/2" BSP**					
Flow Restrictor:	**PCA 8 L/min (EU)** **PCA 5 L/min (US)**					

For specifications (in mm), please see reverse.

Further installation instructions available as a downloadable PDF on the product page of our website.