Studio/ **ORE**

407

PRODUCT NAME

Chapter Four - Wall Mounted Basin Spout

INTERNAL FIRST FIX: WBASSPIP

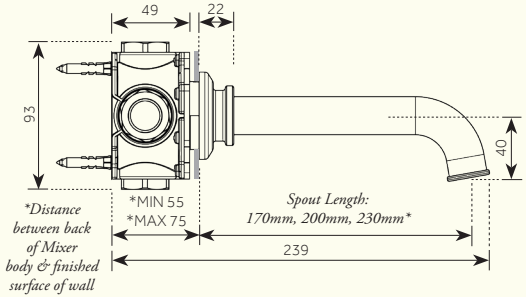

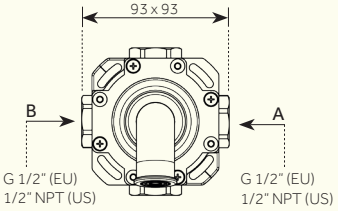

Option DC:
(Double Control)
A: COLD WATER INLET
B: HOT WATER INLET

Option SC:
(Single Control)
A: MIXED WATER INLET

For min/max operating pressures, flow rates and connection information, please see reverse.

Dimensions in mm. *Further installation instructions available as a downloadable PDF on the product page of our website.*

407

PRODUCT NAME

Chapter Four - Wall Mounted Basin Spout

INTERNAL FIRST FIX: WBASSPIP

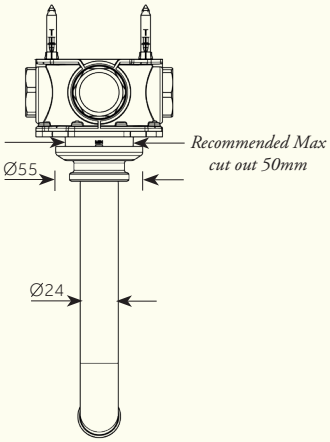

Min/Max Operating pressure: (bars)	**2.0 - 5.0**					
Flow rates: Bar/L per min (with Aerator)	**0.5/5.4**	**1/7.2**	**2/8**	**3/8.7**	**4/8.5**	**5/8.5**
Flow rates: Bar/L per min (without Aerator)	**0.5/15.7**	**1/21.8**	**2/31.2**	**3/43.2**	**4/50.8**	**5/55.3**
Connection:	**1/2" BSP (EU)** **1/2" NPT (US)**					
Flow Restrictor:	**8L per min @ 3 Bar (EU)** **5L per min @ 3 Bar (US)**					

For specifications (in mm), please see reverse.

Further installation instructions available as a downloadable PDF on the product page of our website.