404

PRODUCT NAME

Chapter Four - Deck Mounted Basin Control

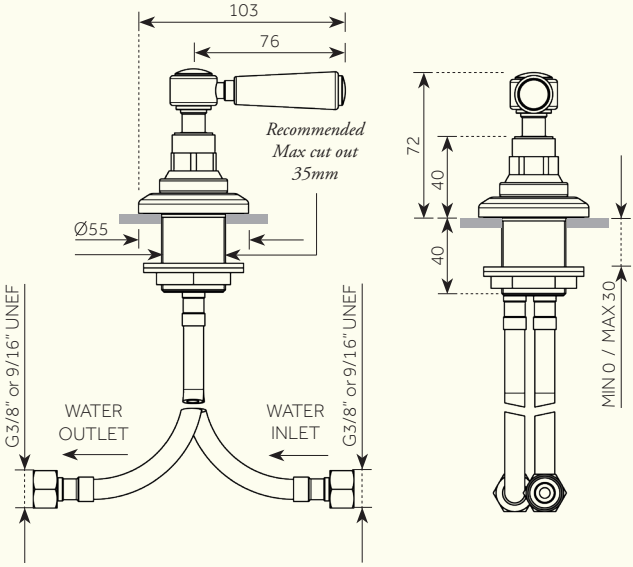

Min/Max Operating pressure: (bars)	**2.0 - 5.0**
Connection:	**3/8" BSP (EU)** **9/16" UNEF (US)** **1/2" Adaptors (UK)**
Flow Restrictor:	**N/A**

Dimensions in mm. *Further installation instructions available as a downloadable PDF on the product page of our website.*