Studio/ **ORE**

17

PRODUCT NAME

Bath Spout

INTERNAL FIRST FIX: WBASPIP

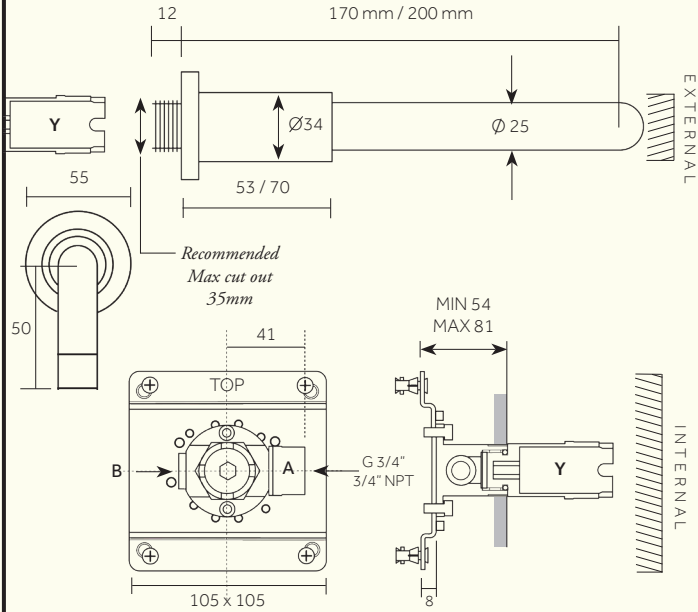

Min/Max Operating pressure: (bars)	**2.0 - 5.0**					
Flow rates: Bar/L per min (with Aerator)	**0.5/9.9**	**1/13.7**	**2/19.3**	**3/23.5**	**4/27.1**	**5/30.3**
Flow rates: Bar/L per min (without Aerator)	**0.5/27.7**	**1/38.4**	**2/53.3**	**3/65.9**	**4/76**	**5/85**
Connection:	**1/2" BSP (NPT ADAPTERS ARE INCLUDED)**					

Dimensions in mm.

Further installation instructions available as a downloadable PDF on the product page of our website.