Studio/ **ORE**

134
V5

PRODUCT NAME

Chapter One - Dual Shower Thermostat with Volume Control - V5

INTERNAL FIRST FIX: TM2HIP -V5

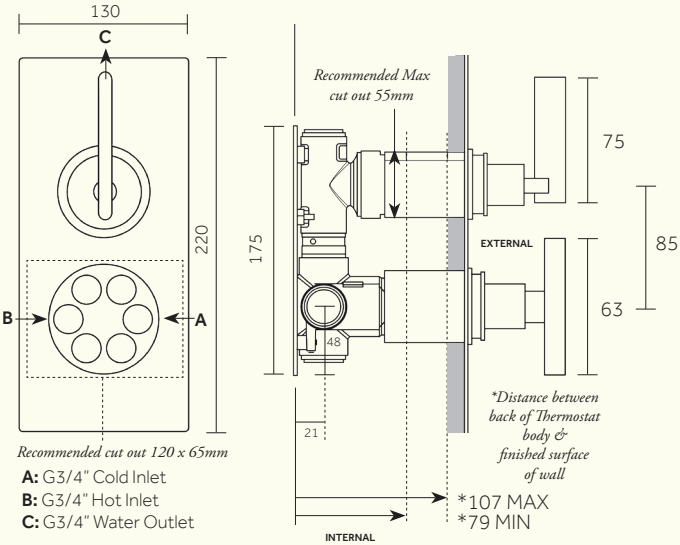

A: G3/4" Cold Inlet
B: G3/4" Hot Inlet
C: G3/4" Water Outlet

Min/Max Operating pressure: (bars)	0.5 - 6.0						
TM2HIP Flow rates: Bar/L per min	0.5/12.0	1.0/17.0	2.0/24.5	3.0/30.0	4.0/34.6	5.0/38.7	6.0/42.3
Connection:	3/4" BSP (NPT ADAPTERS ARE INCLUDED)						

Dimensions in mm. *Further installation instructions available as a downloadable PDF on the product page of our website.*